Part No:	GH-431-R
Holding Capacity:	318Kg
Weight:	0.27Kg
Latch Plate Supplied:	GH-431-LP

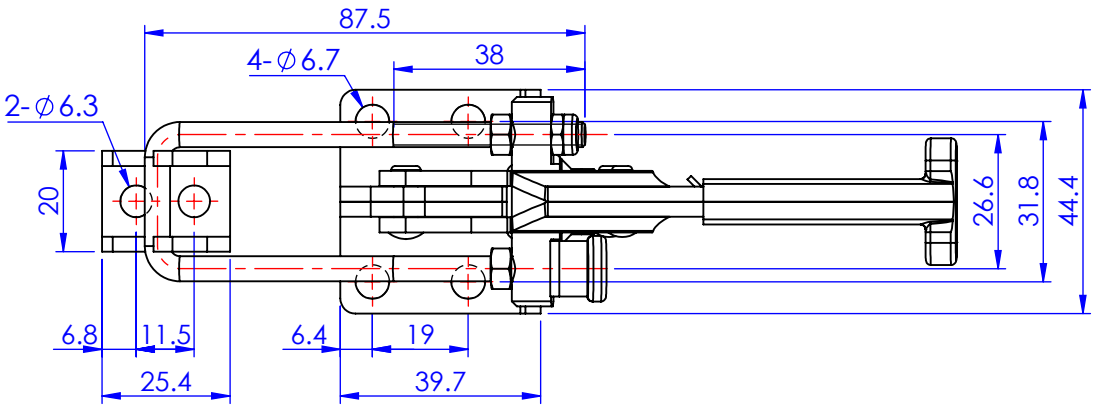

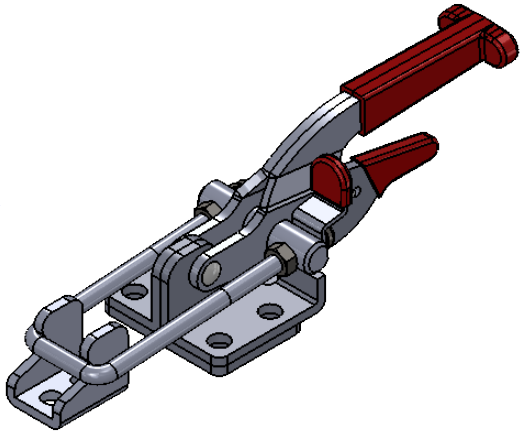

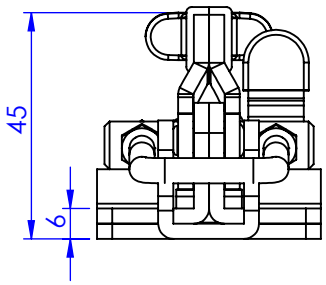

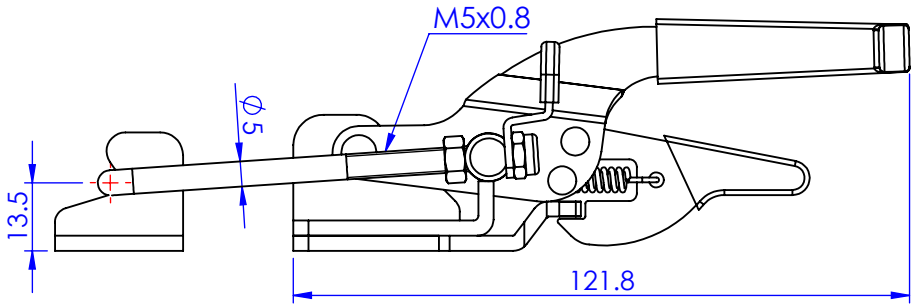

Unit:mm

Scale: 1:1.5

Good Hand Enterprise Co., Ltd

TITLE:

DWG NO. GH-431-R

A4