Part No:	GH-40840
Holding Capacity:	400Kg
Weight:	0.32Kg
Latch Plate Supplied:	GH-40840-LP

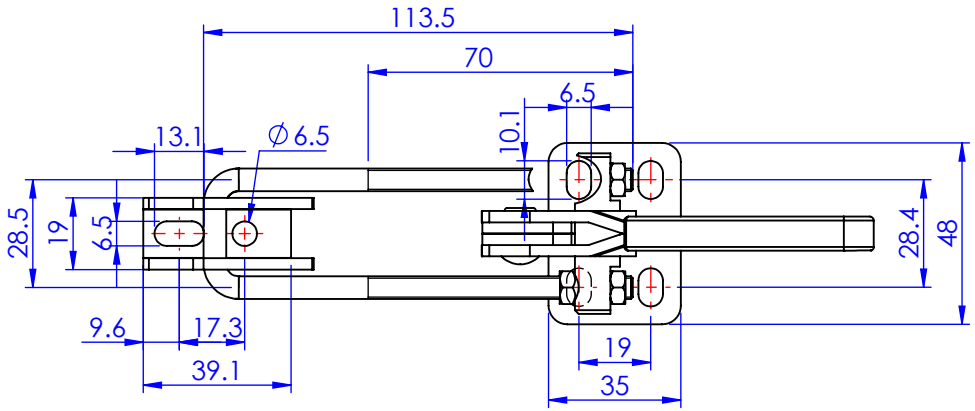

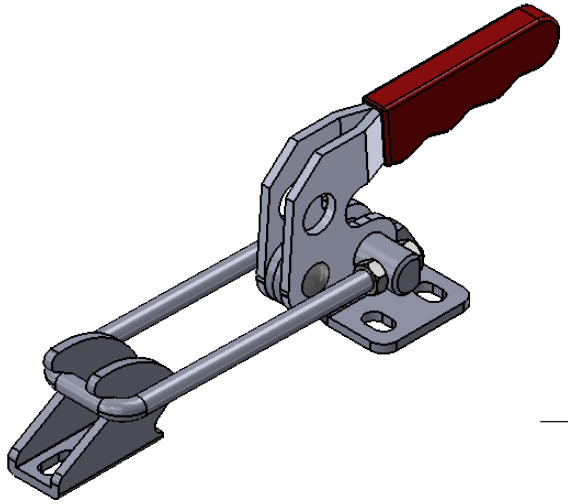

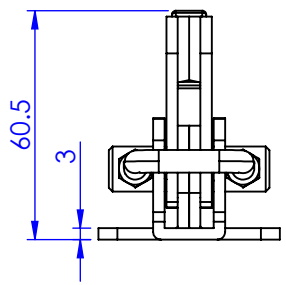

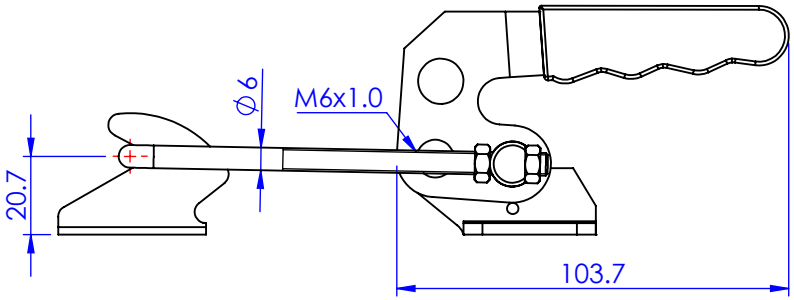

Unit:mm

Scale: 1:2

Good Hand Enterprise Co., Ltd

TITLE:

DWG NO. GH-40840

A4