Part No:	GH-40700-SS
Holding Capacity:	700Kg
Weight:	0.96Kg
Latch Plate Supplied:	GH-40700-LPSS

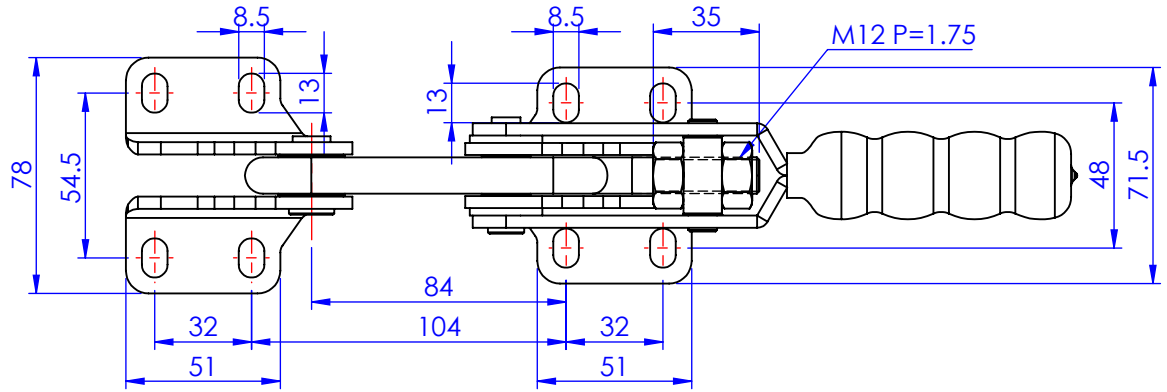

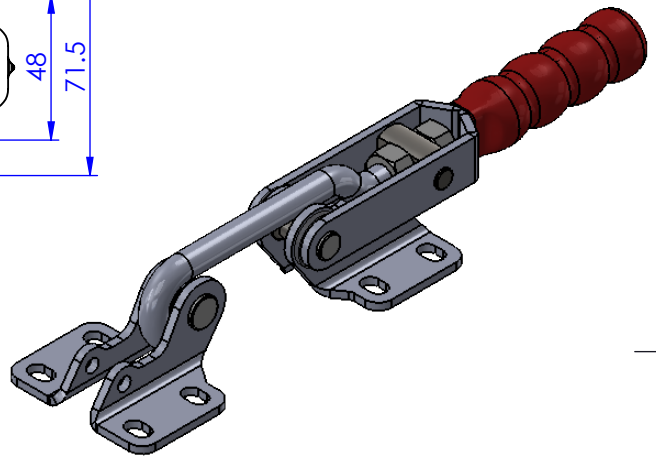

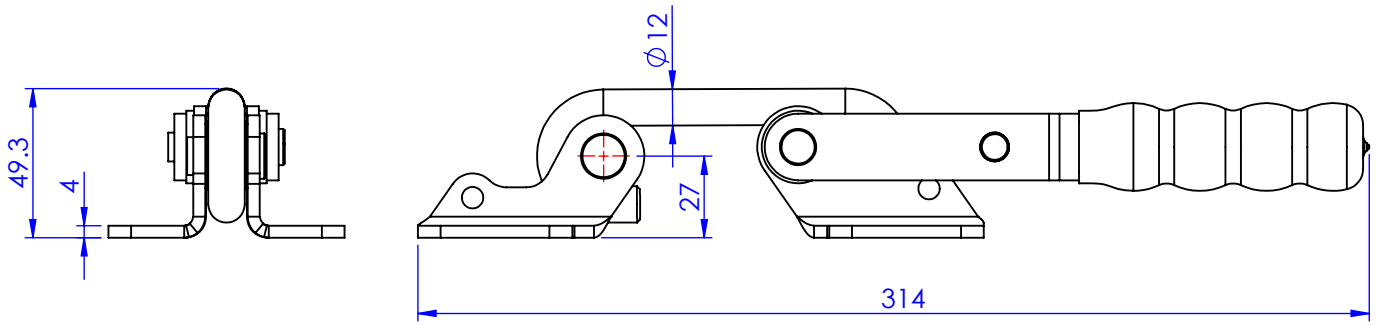

Unit:mm

Scale: 1:2.5

Good Hand Enterprise Co., Ltd

TITLE:

DWG NO. GH-40700-SS

A4