Part No:	GH-40380-RSS
Holding Capacity:	3400Kg
Weight:	1.61Kg
Optional Latch Plate:	GH-40370-LPSS

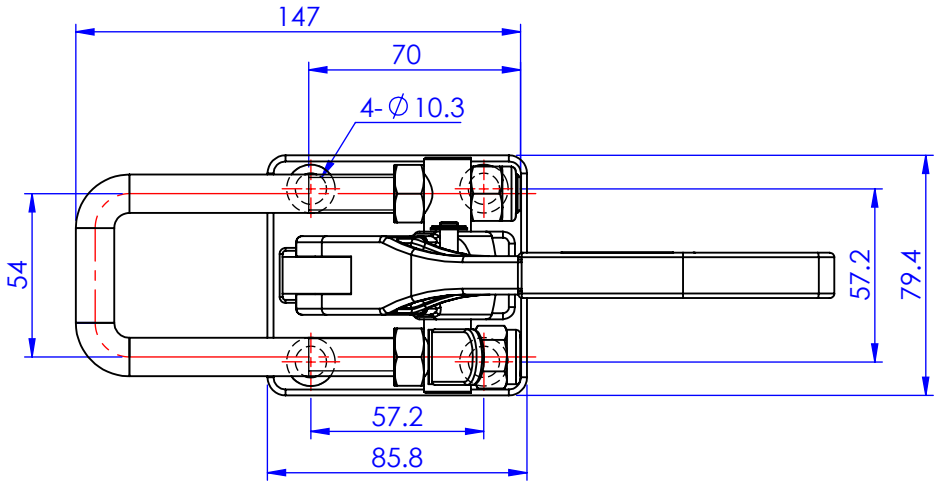

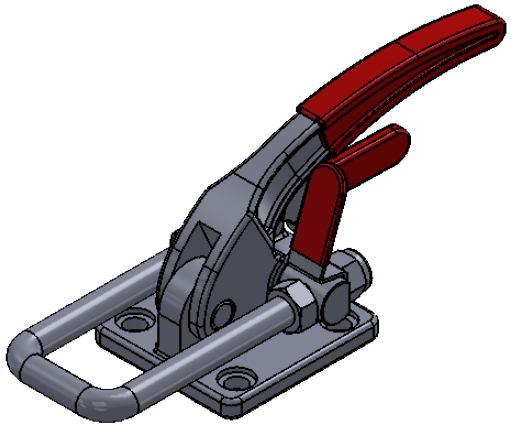

GH-40380-RSS

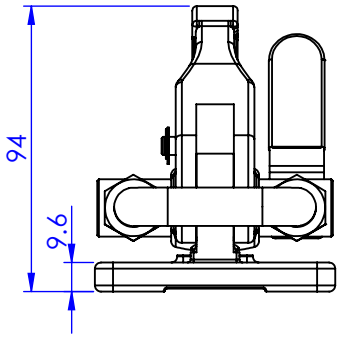

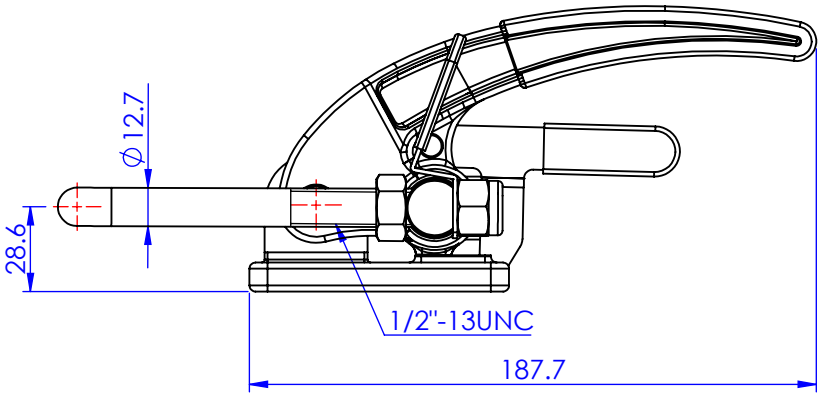

Unit:mm

Scale: 1:2.5

Good Hand Enterprise Co., Ltd

TITLE:

DWG NO. GH-40380-RSS A4