Part No:	GH-301-CMR
Holding Capacity:	50Kg
Plunger Stroke:	16 mm
Handle Opens:	180°
Weight:	0.06Kg
Spindle Supplied:	FC-041807

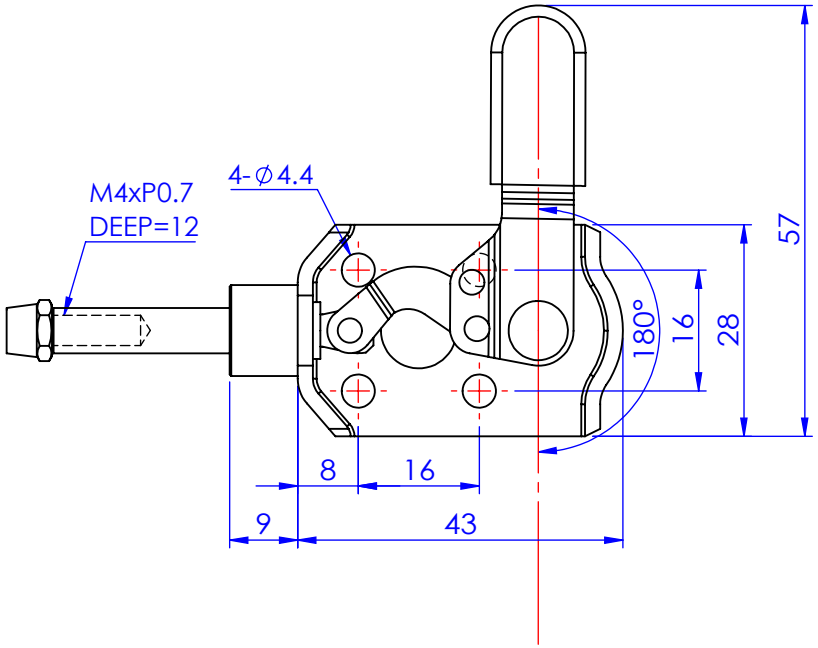

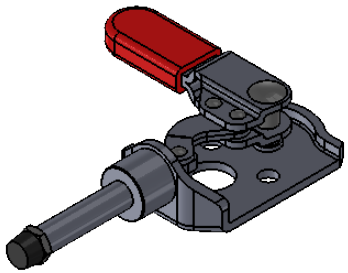

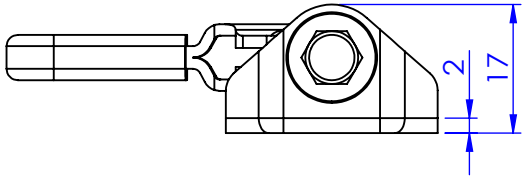

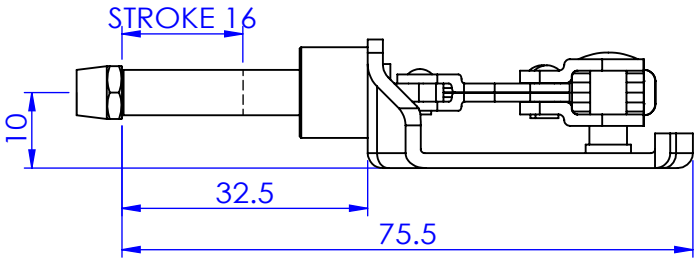

Unit:mm
Scale: 1:1

Good Hand Enterprise Co., Ltd

TITLE:

DWG NO. GH-301-CMR A4