Part No:	GH-22501-B
Holding Capacity:	250 Kg
Bar Opens:	90°
Handle Opens:	72°
Weight:	0.44 Kg
Spindle Supplied:	SA-086012
Flanged Washers:	FW-516

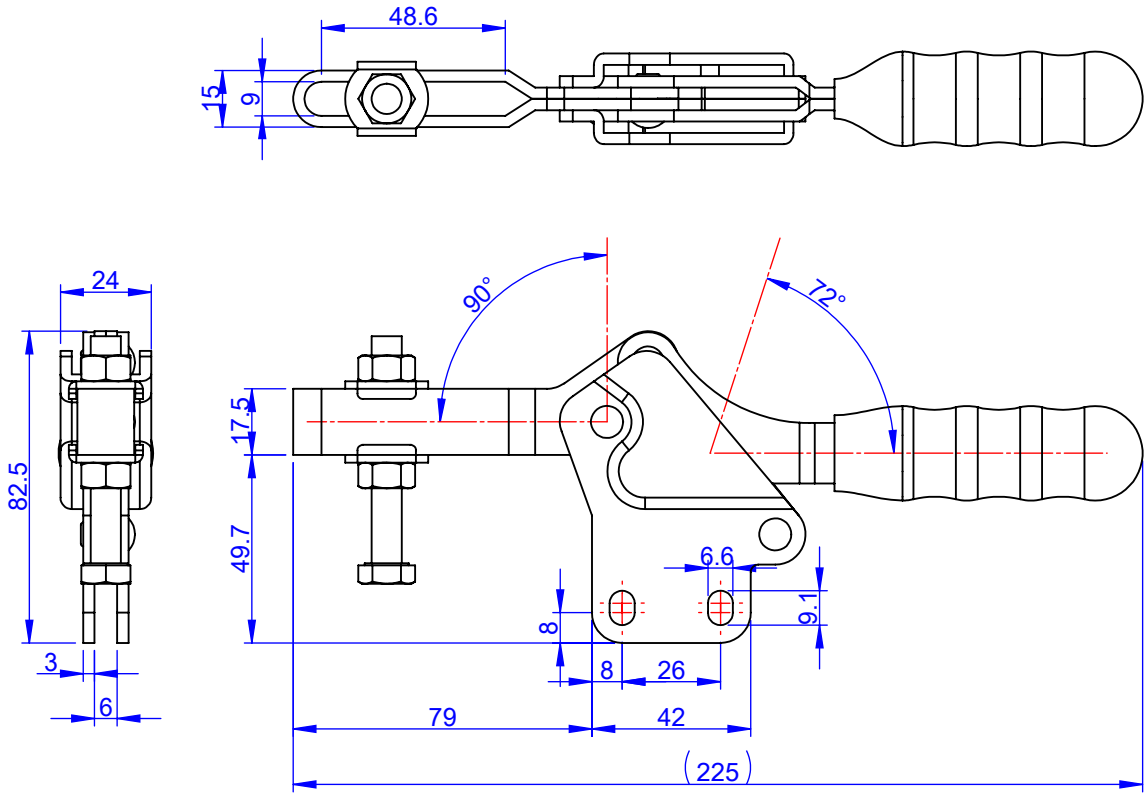

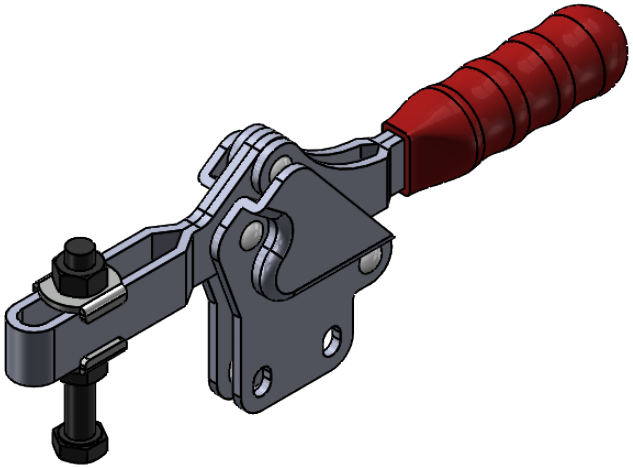

Drawing Scale:1:2
Unit:mm

Good Hand Enterprise Co., Ltd

TITLE:

DWG NO. GH-22501-B

A4