Part No:	GH-44000
Holding Capacity:	4000 Kg
Handle Opens:	120°
Weight:	2.5 Kg
Latch Plate Supplied:	GH-44000-LP

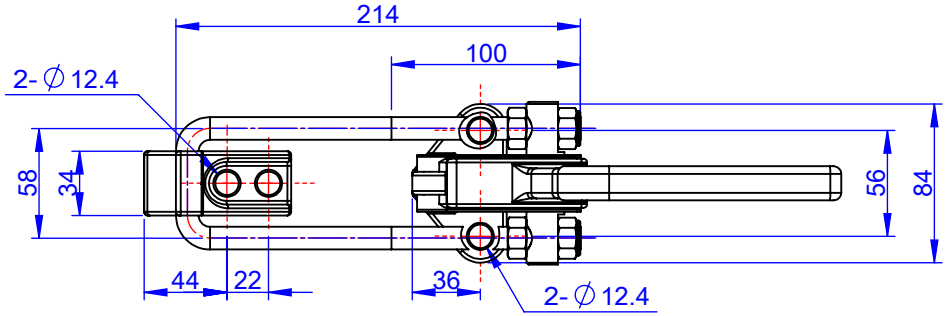

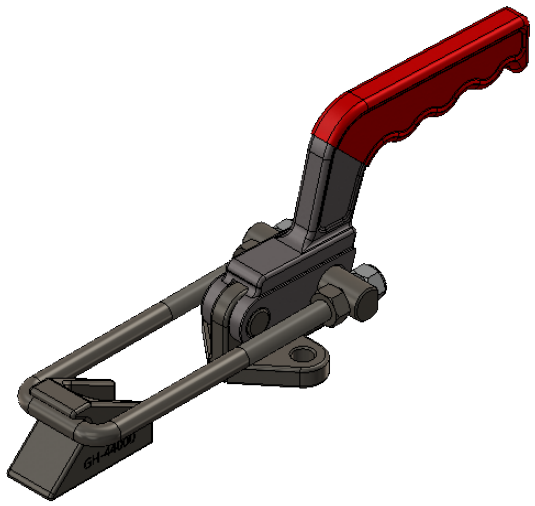

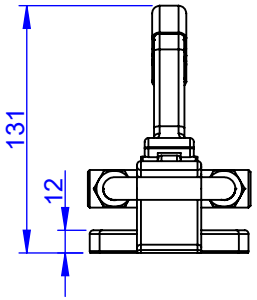

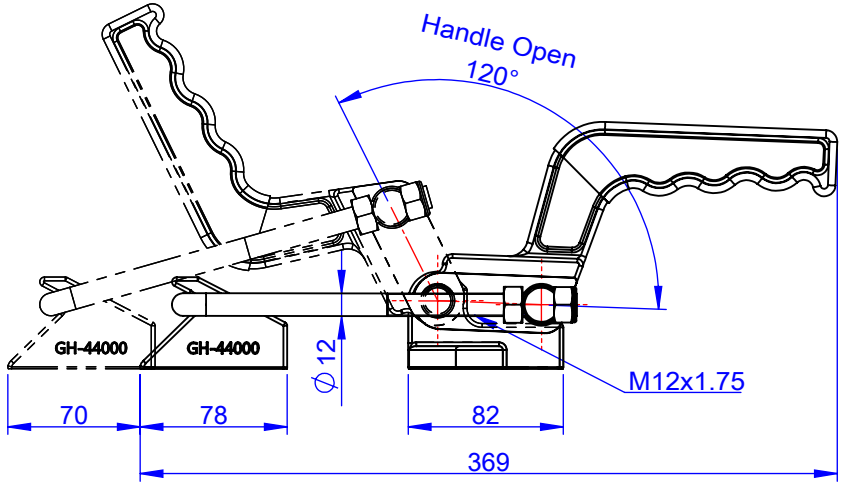

Drawing Scale:1:4
Unit:mm

Good Hand Enterprise Co., Ltd

TITLE:

DWG NO. GH-44000

A4