Part No:	GH-36202-MSS
Holding Capacity:	91Kg
Plunger Stroke:	20.3mm
Handle Opens:	189°
Weight:	0.12Kg
Spindle Supplied:	SA-063010-SS

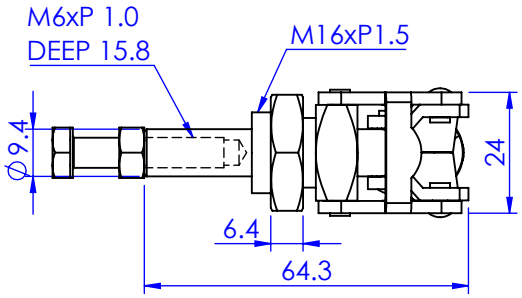

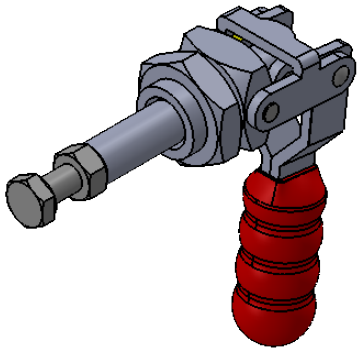

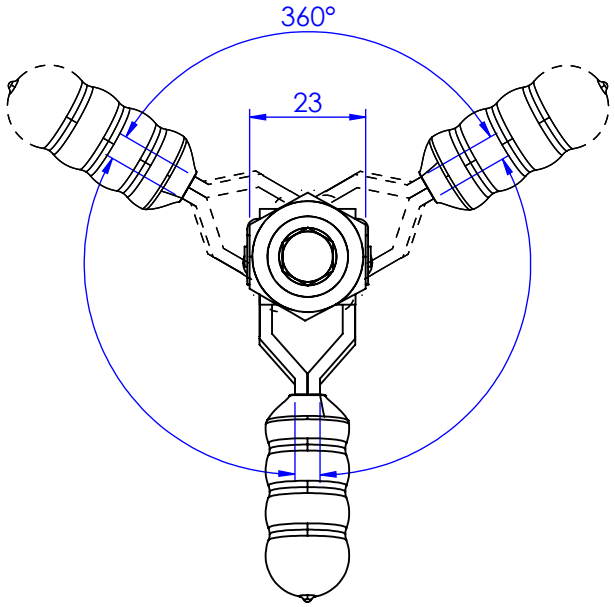

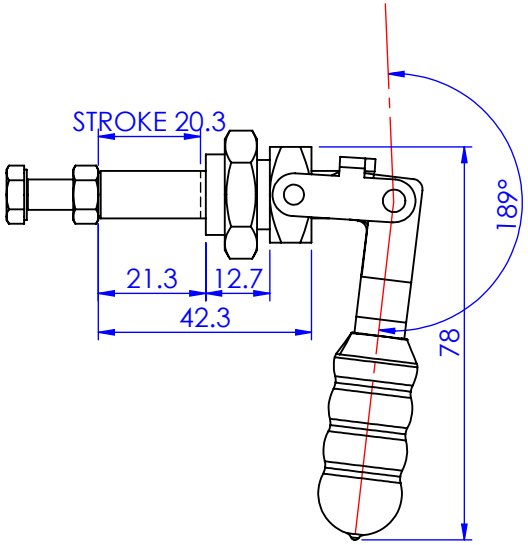

Unit:mm

Scale: 1:1.5

Good Hand Enterprise Co., Ltd

TITLE:

DWG NO. GH-36202-MSS A4