Part No:	GH-32500PR-A
Holding Capacity:	2500Kg
Plunger Stroke:	50mm
Weight:	19.62Kg
Spindle Supplied:	SA-127515
Air Connection Size:	1/8PT
Cylinder Bore:	40mm
Max Cylinder Air Pressure:	9Kgf/cm²
Optional Magnetic Sensors:	MT-22

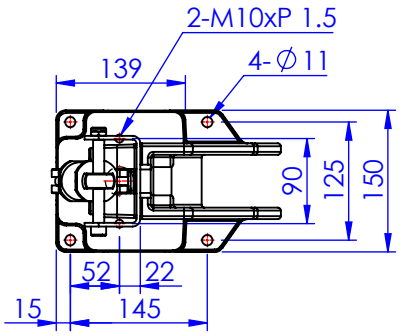

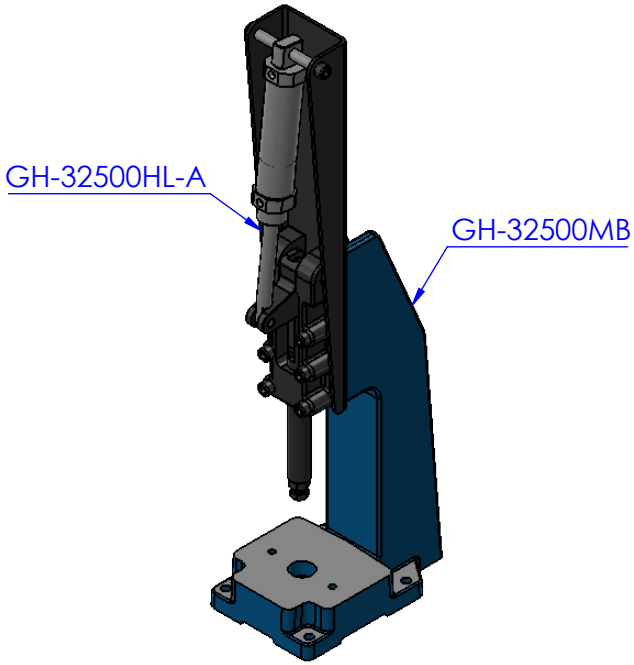

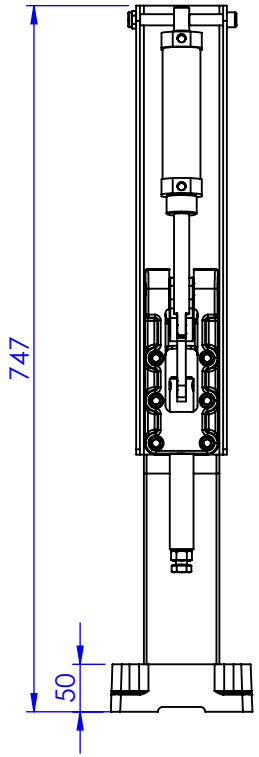

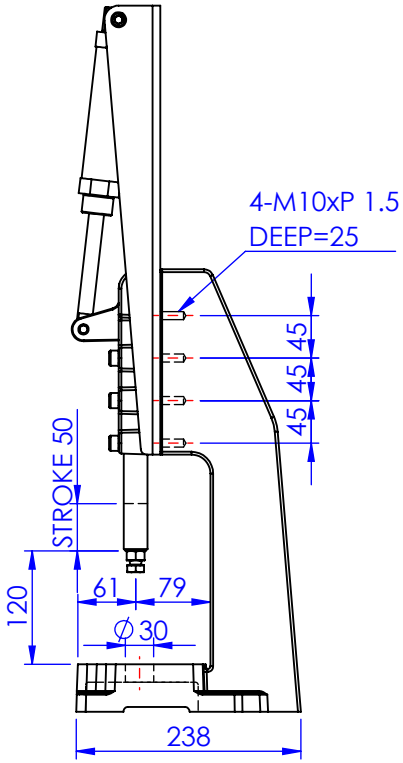

Unit:mm

Scale: 1:8

Good Hand Enterprise Co., Ltd

TITLE:

DWG NO. GH-32500PR-A

A4