Part No:	GH-10750-A
Holding Capacity:	75 Kg
Bar Opens:	70°
Weight:	0.6 Kg
Spindle Supplied:	SA-053508 + NC-05
Flanged Washers:	FW-100
Air Connection Size:	1/8PT
Cylinder Bore:	∅25mm
Max Cylinder Air Pressure:	9 Kgf/cm²
Optional Magnetic Sensors:	MT-22

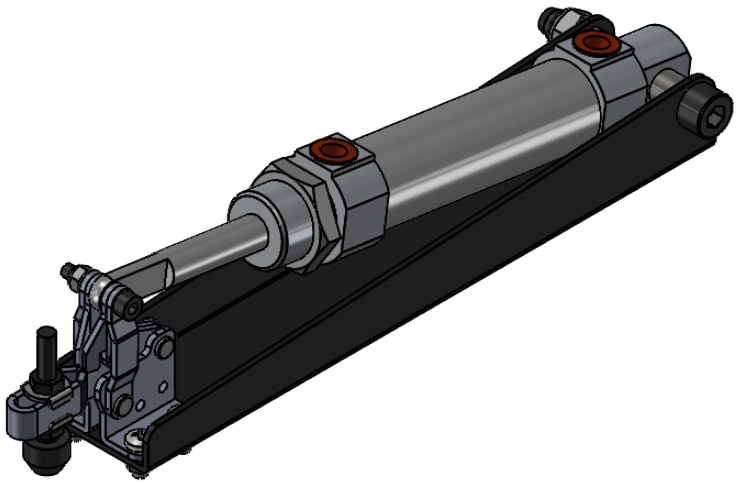

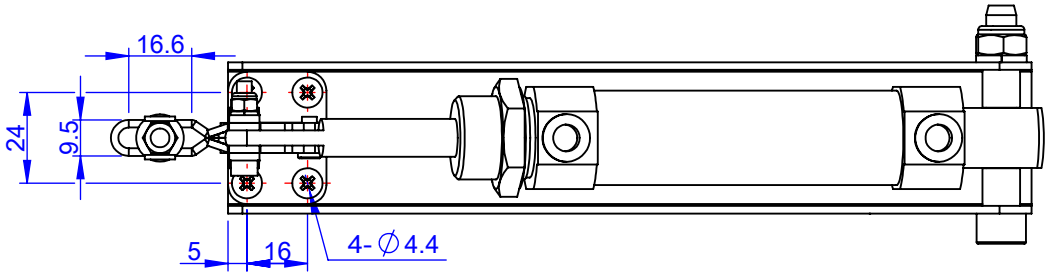

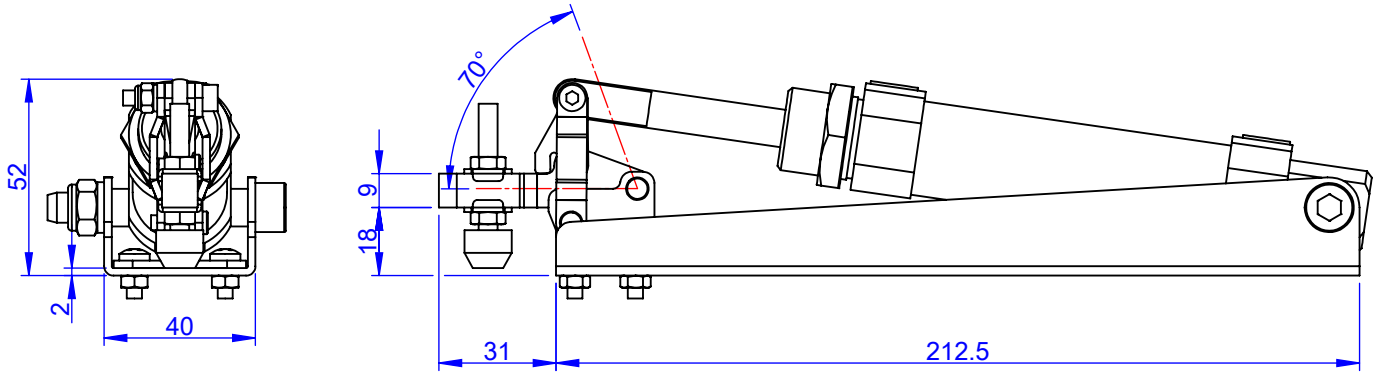

Drawing Scale:1:2
Unit:mm

Good Hand Enterprise Co., Ltd

TITLE:

DWG NO. GH-10750-A

A4